110.023TECC-IE3
Technical Drawing

Electrotech Drives
1A Washingbay Road
Coalisland, Dungannon
Co Tyrone, BT714ND
Tel: 028 877 29881
Email: sales@electrotechdrives.co.uk

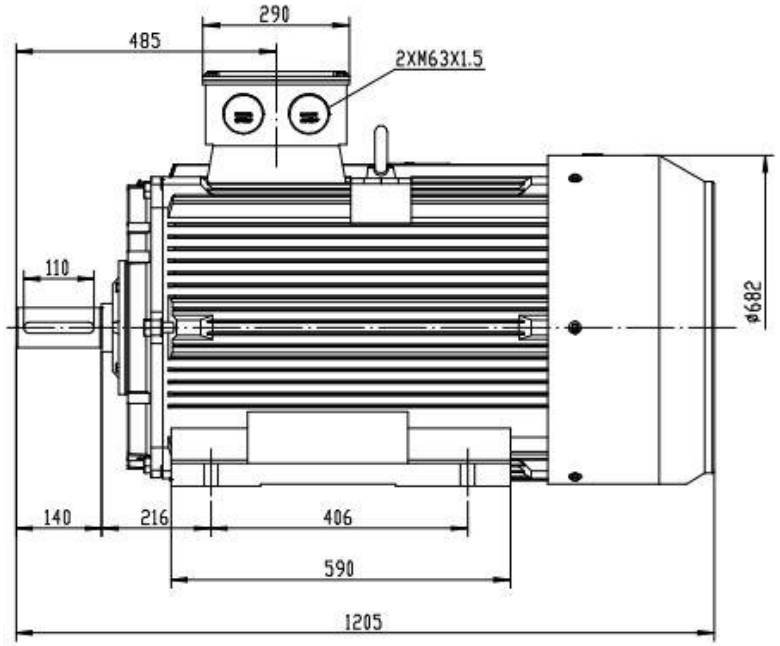

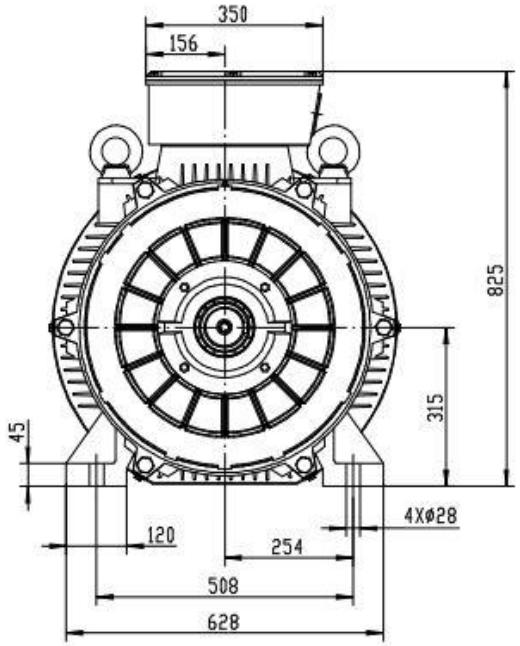

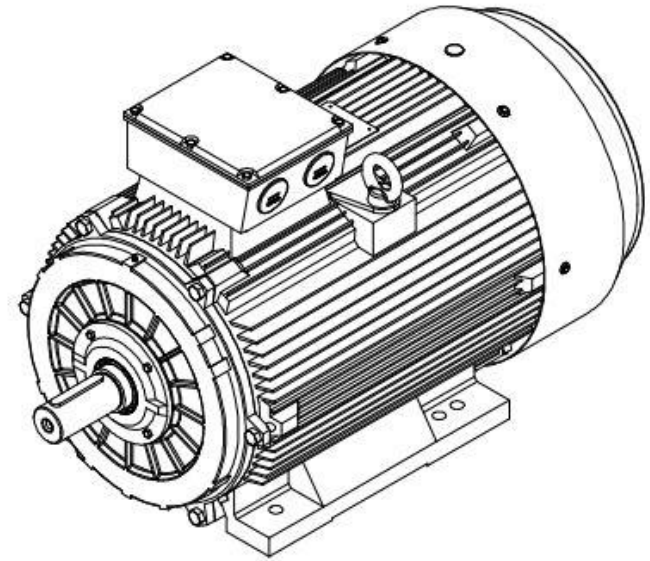

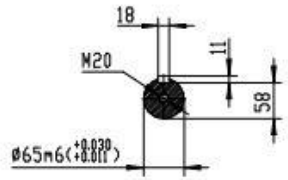

TC 315S2 B3

110.023TECC-IE3
Technical Drawing

Electrotech Drives
1A Washingbay Road
Coalisland, Dungannon
Co Tyrone, BT714ND
Tel: 028 877 29881
Email: sales@electrotechdrives.co.uk

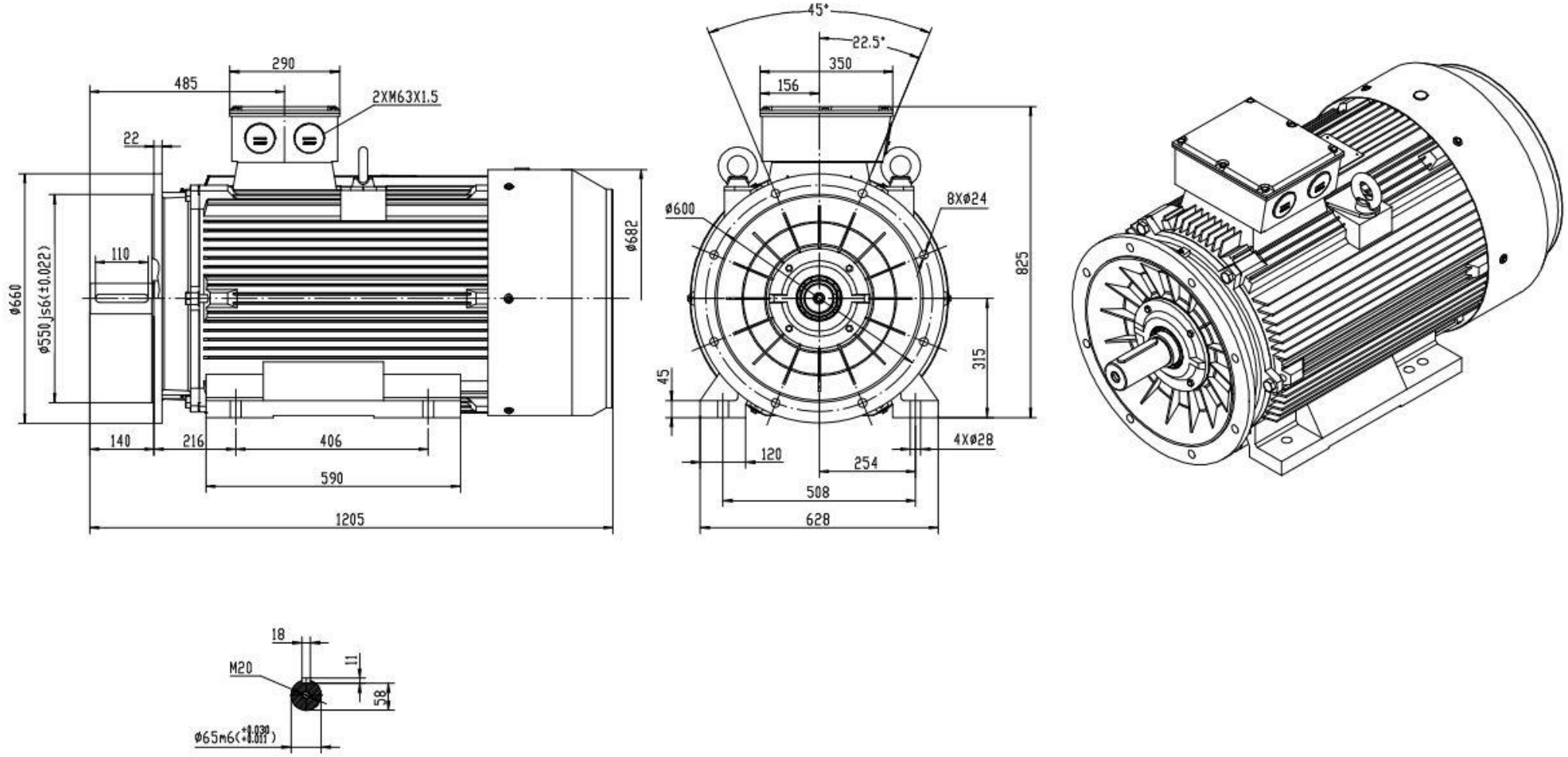

TC 315S2 B35