30.023TECC – IE3
Technical Drawing

Electrotech Drives
1A Washingbay Road
Coalisland, Dungannon
Co Tyrone, BT714ND
Tel: 028 877 29881
Email: sales@electrotechdrives.co.uk

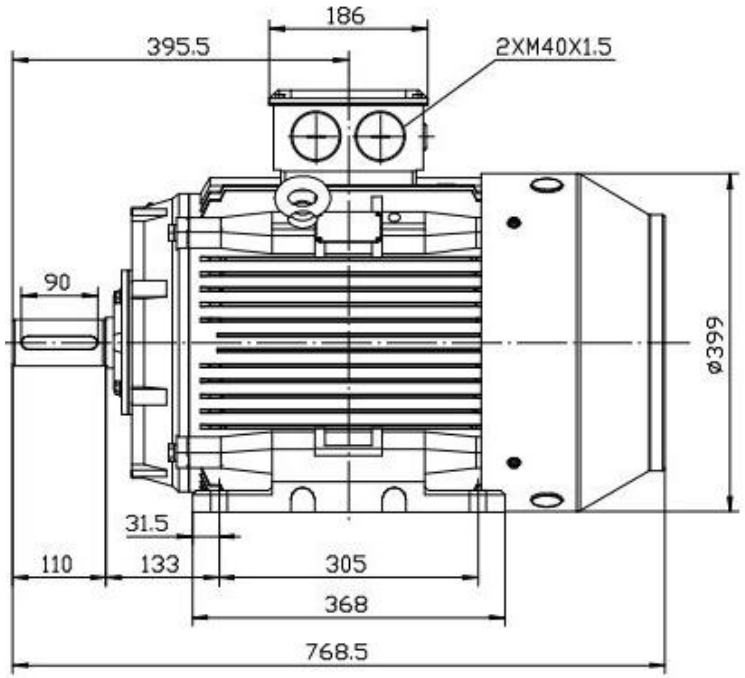

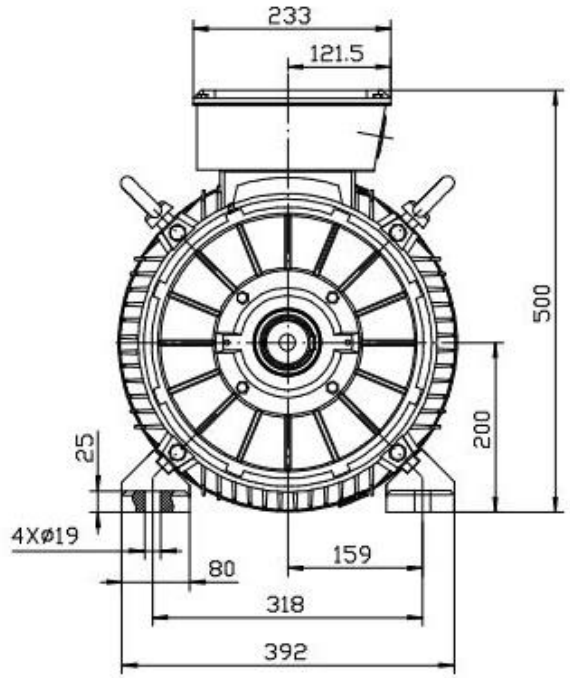

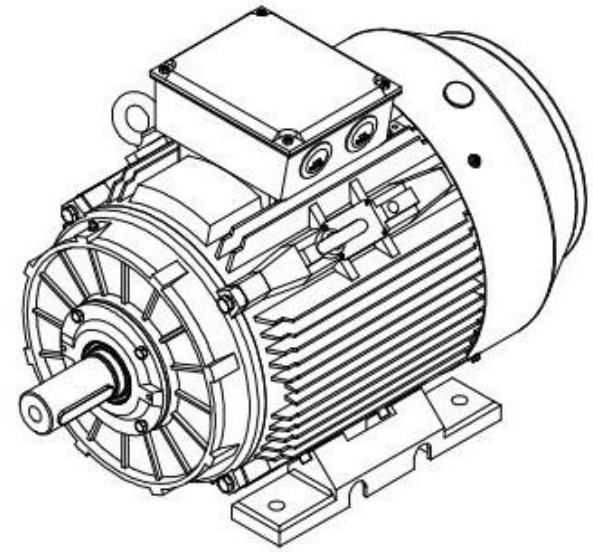

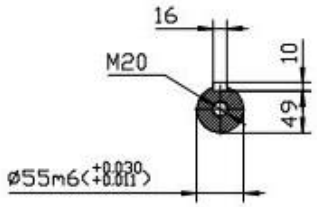

TC 200 B3

30.023TECC – IE3
Technical Drawing

Electrotech Drives
1A Washingbay Road
Coalisland, Dungannon
Co Tyrone, BT714ND
Tel: 028 877 29881
Email: sales@electrotechdrives.co.uk

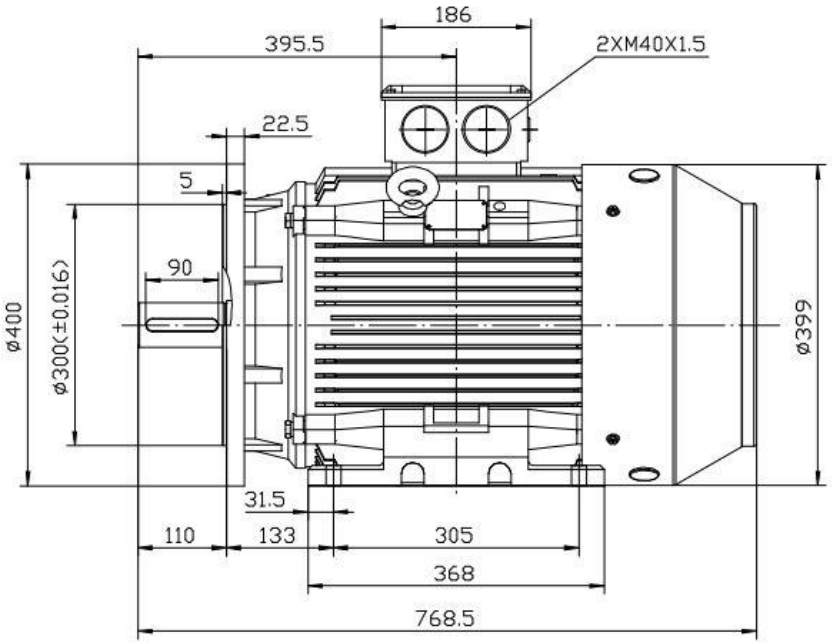

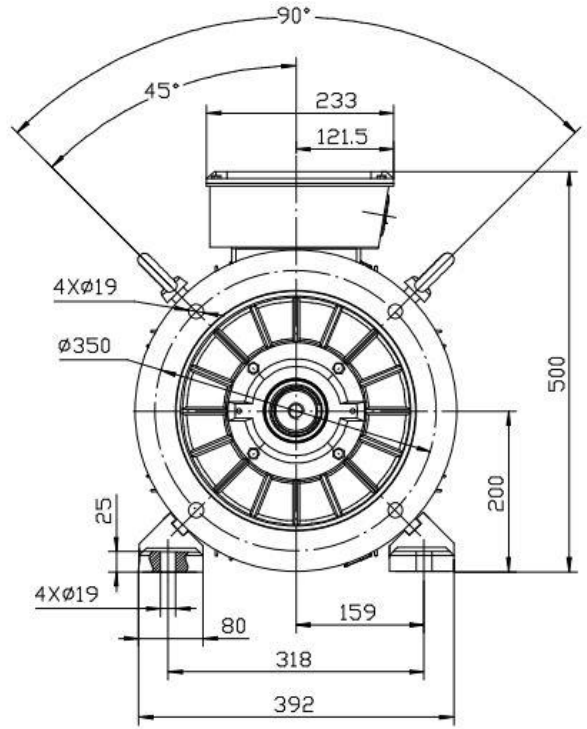

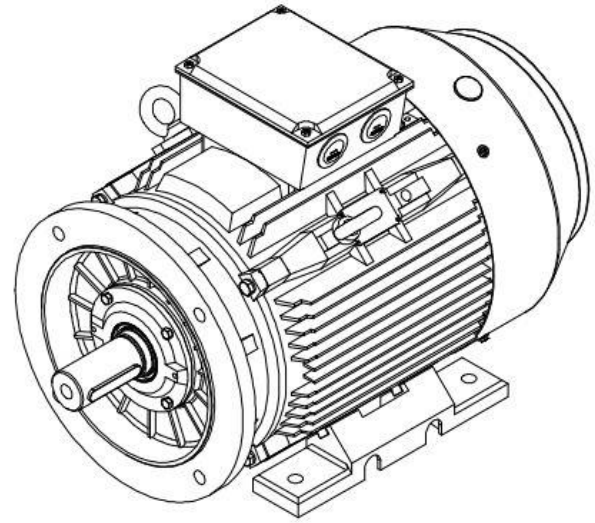

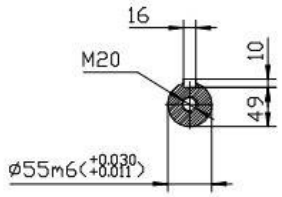

TC 200 B35