75.063TECC-IE3
Technical Drawing

Electrotech Drives
1A Washingbay Road
Coalisland, Dungannon
Co Tyrone, BT714ND
Tel: 028 877 29881
Email: sales@electrotechdrives.co.uk

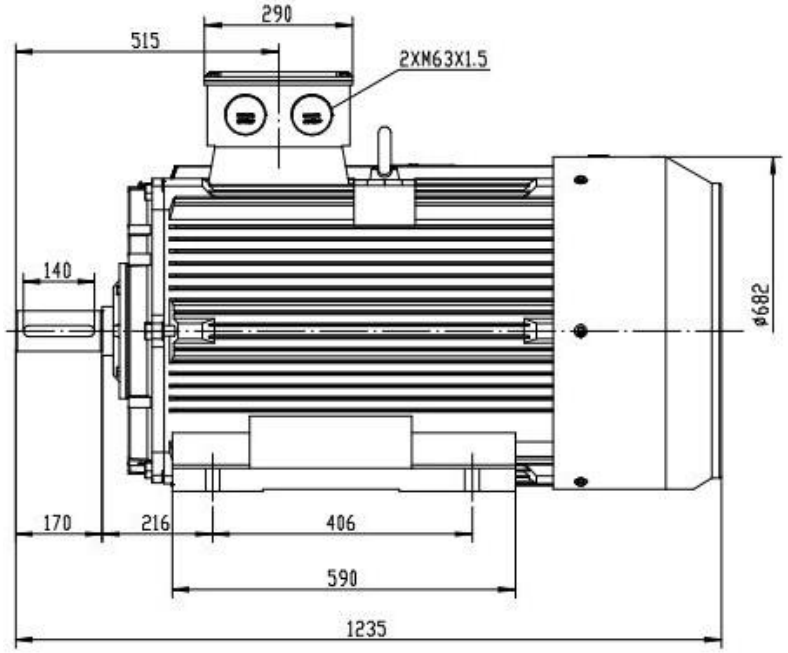

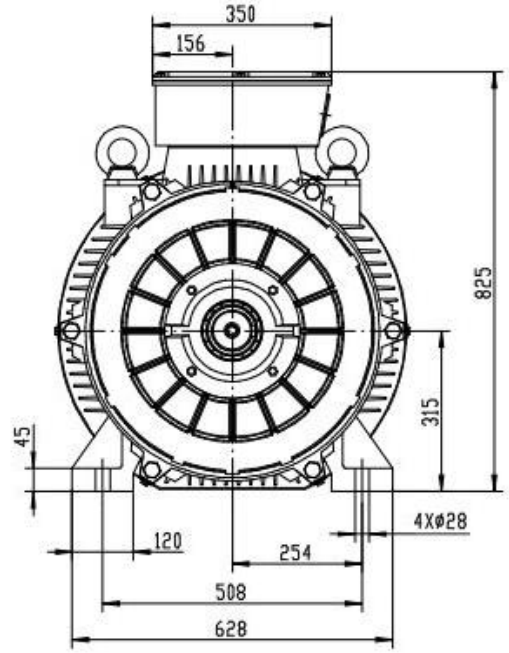

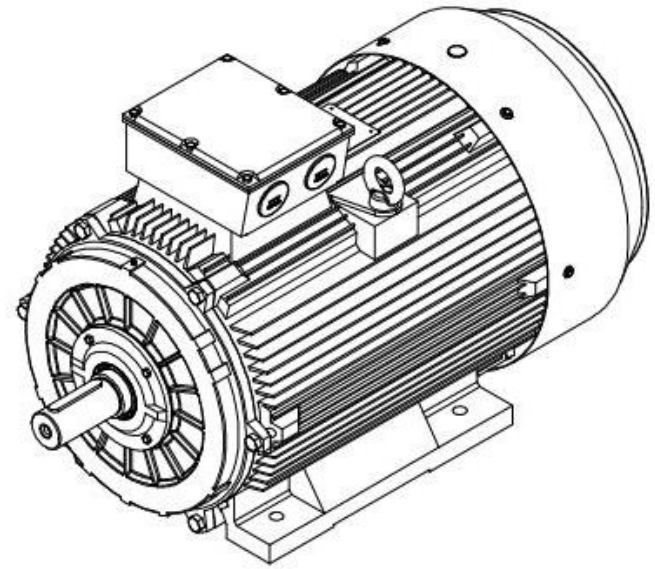

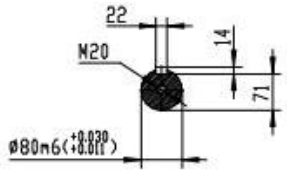

TC 315S 4, 6 & 8PL B3

75.063TECC-IE3
Technical Drawing

Electrotech Drives
1A Washingbay Road
Coalisland, Dungannon
Co Tyrone, BT714ND
Tel: 028 877 29881
Email: sales@electrotechdrives.co.uk

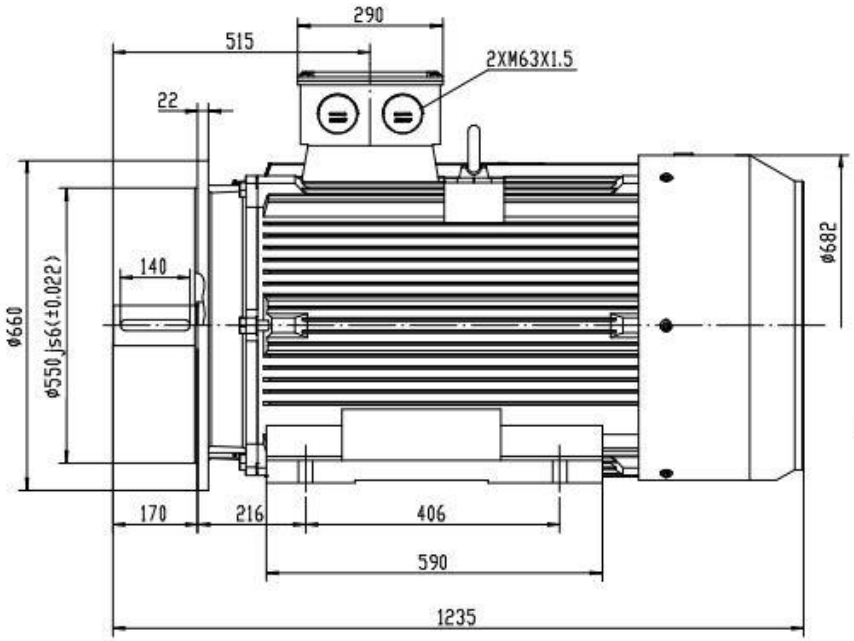

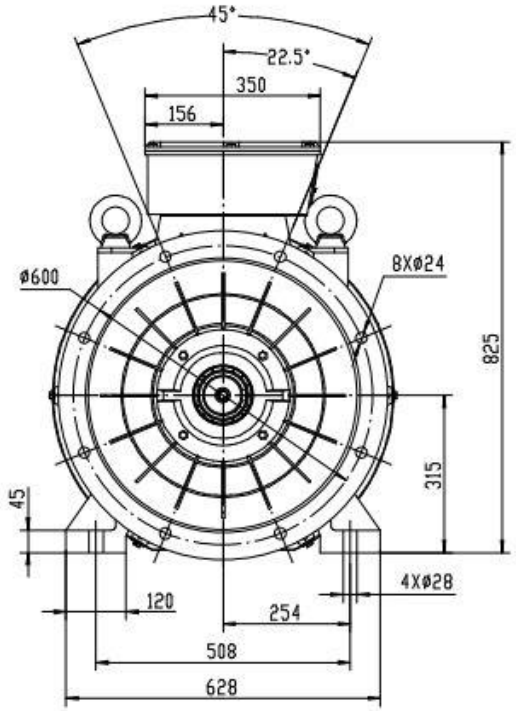

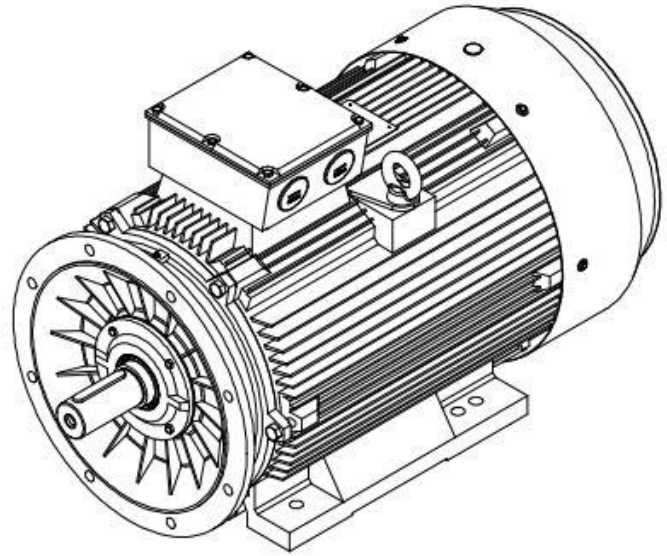

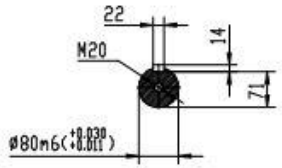

TC 315S 4, 6 & 8PL B35