5.563TECA-BM
Technical Drawing

Electrotech Drives
1A Washingbay Road
Coalisland, Dungannon
Co Tyrone, BT714ND
Tel: 028 877 29881
Email: sales@electrotechdrives.co.uk

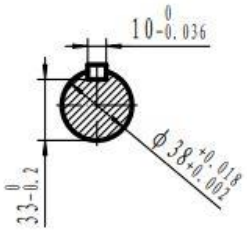

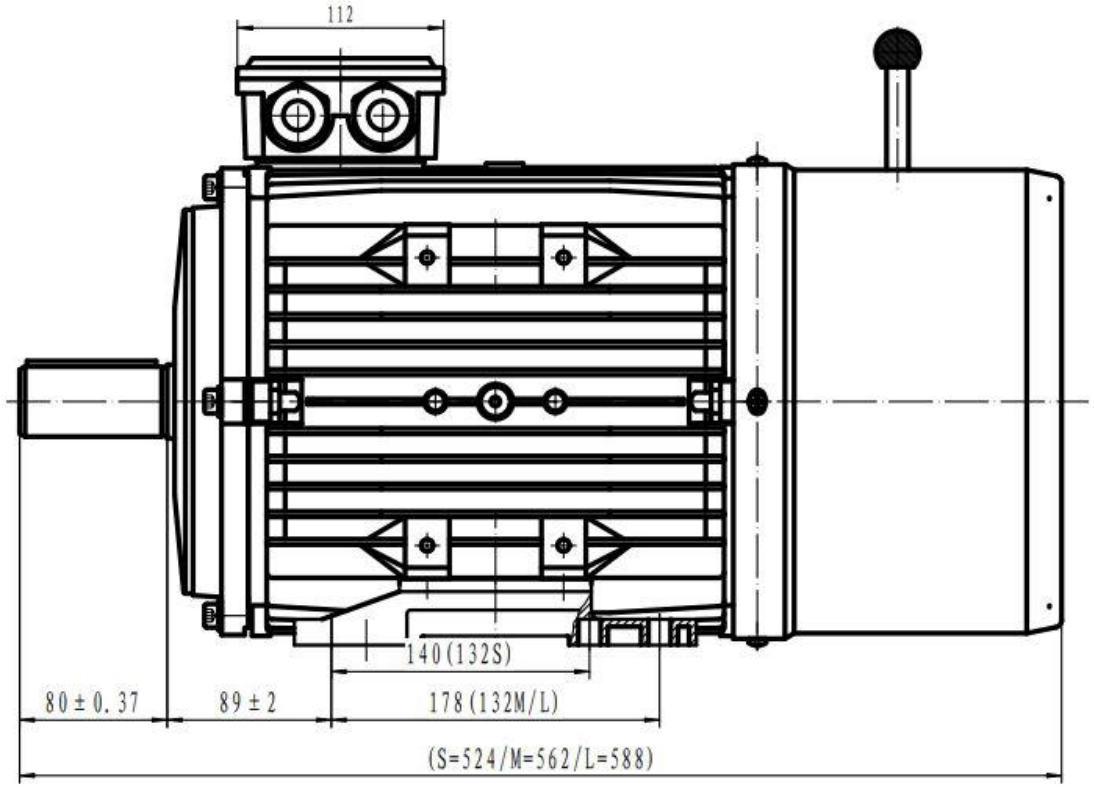

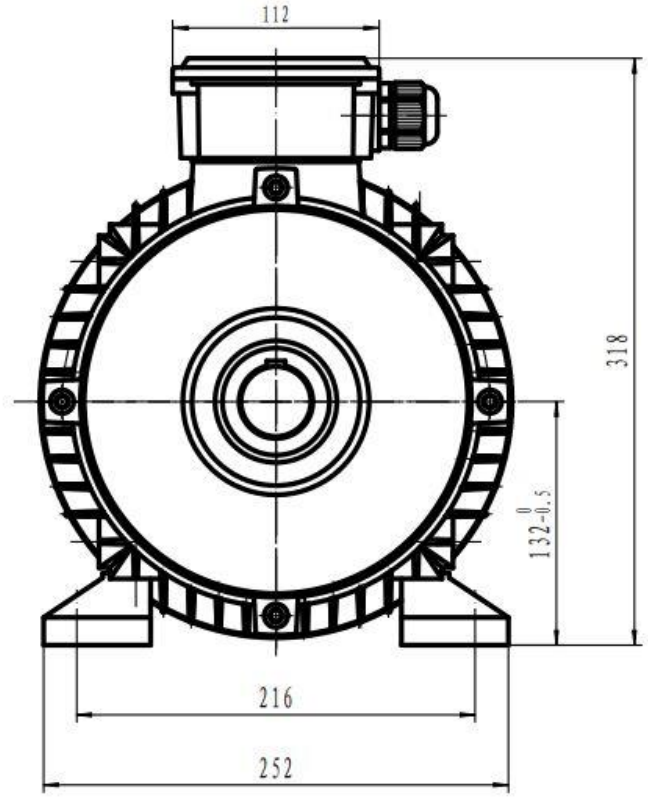

TECA BM 132 Frame B3

5.563TECA-BM
Technical Drawing

Electrotech Drives
1A Washingbay Road
Coalisland, Dungannon
Co Tyrone, BT714ND
Tel: 028 877 29881
Email: sales@electrotechdrives.co.uk

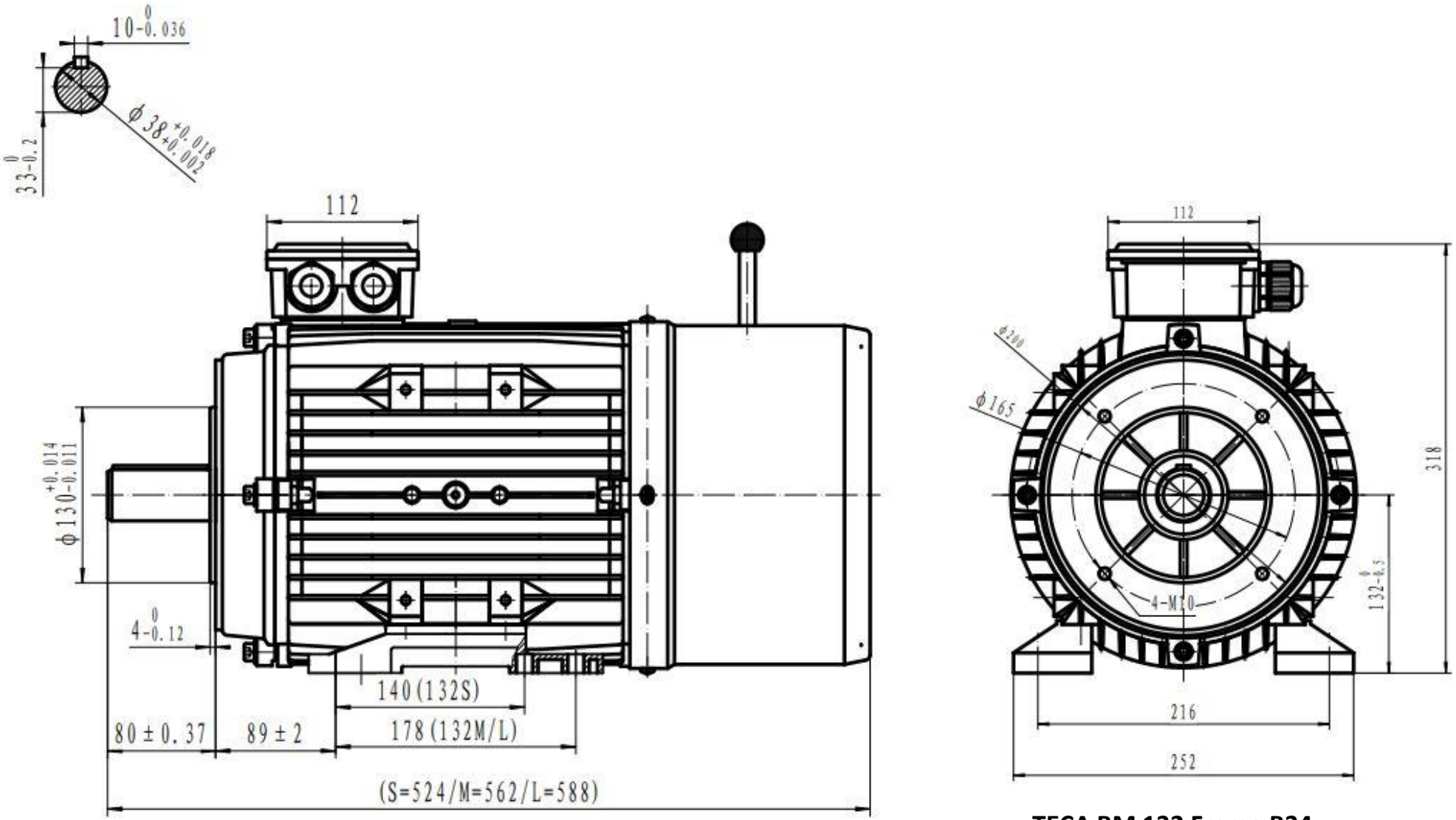

TECA BM 132 Frame B34

5.563TECA-BM
Technical Drawing

Electrotech Drives
1A Washingbay Road
Coalisland, Dungannon
Co Tyrone, BT714ND
Tel: 028 877 29881
Email: sales@electrotechdrives.co.uk

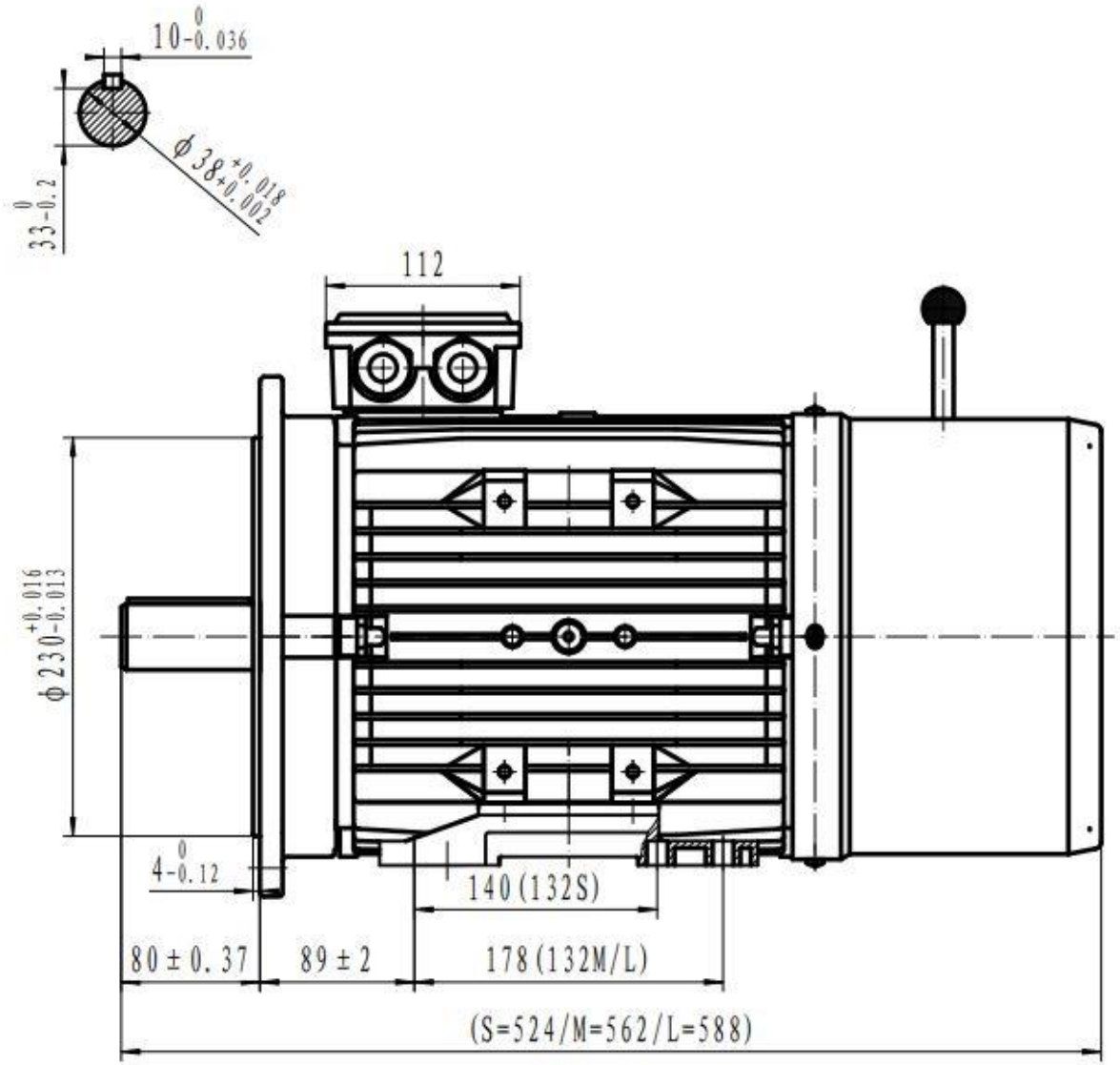

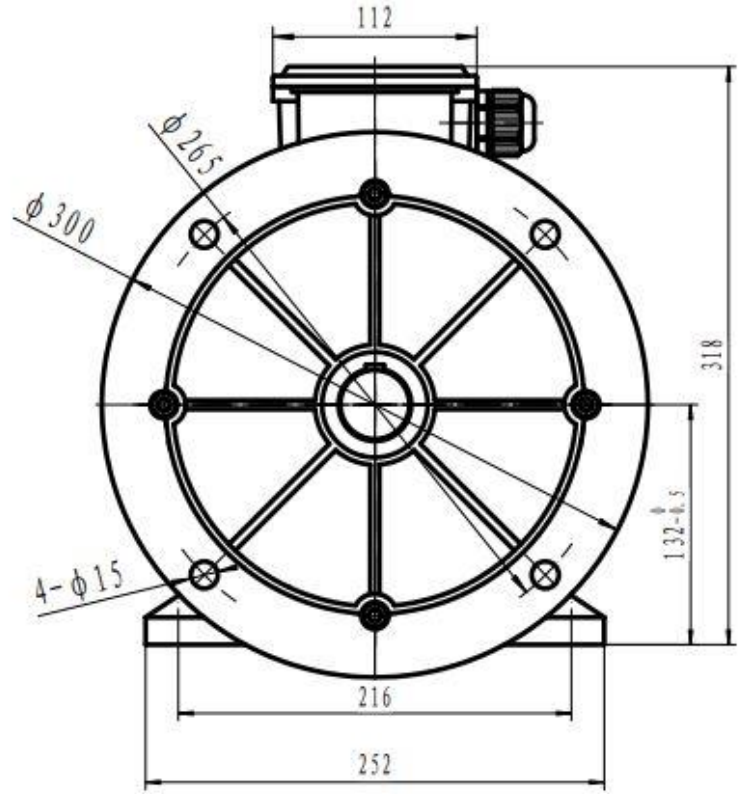

TECA BM 132 Frame B35